OMEGA
An OMEGA Technologies Company

FL-86 Series Rotameters

INSTRUCTION SHEET

M2208/0295

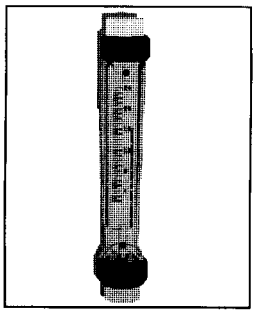

The OMEGA® FL-86 Series Rotameters are designed for corrosive applications and feature a break-resistant metering tube and detachable direct reading scale.

INSTALLATION

1. Carefully inspect the meter for damage that may have occurred during shipping.
2. Make sure your pressure, temperature, fluid and other requirements are compatible with the meter.
3. Select a suitable location for installation to prevent excess stress on the meter which may result from:
   (a) misaligned pipe
   (b) the weight of related plumbing
   (c) "Water hammer", which is most likely to occur when flow is suddenly stopped as with quick closing solenoid valves. (If necessary, a surge chamber should be installed. This will also be useful in high pressure start-up situations.)
   d) Thermal expansion of liquid in a stagnated or valve isolated system.
   e) Instantaneous pressurization which will stress the meter and could result in tube failure.

   In closed thermal transfer or cooling systems, install the meter in the cool side of the line to minimize meter expansion and contraction and possible related fluid leaks.
4. Handle the meter carefully during installation. Use an appropriate amount of Teflon tape on external pipe threads before making connections. Do not use paste or stick-type thread sealing products.
5. Install the meter vertically with the inlet port at the bottom.
6. Meters with shields must never be operated without shields securely in place. Failure to use safety shields may result in serious injury to personnel and property.
7. Meters are not oxygen cleaned. Use with incompatible fluids will cause O-rings to swell and break tubes. Meters used in gas service should have suitable valves plumbed in at the inlet and outlet of the meter. The valve at the outlet should be used to create back pressure as required to prevent float bounce. The inlet valve should be used for throttling purposes.
8. Meters used in gas service must be shielded to protect personnel and property in the event of meter failure.

DIMENSIONS

Model No.	Flow Range GPM, Water	Connection Size (FNPT)	Dimensions (Inches)	
			A	B
FL-86A	0.1-1	1/2″	10	1⅜
FL-86B	0.2-2.4	3/4″	10	1¾
FL-86C	0.5-5	3/4″	10	1¾
FL-86D	1-10	1″	12½	2¼
FL-86E	2-20	1″	12½	2¼
FL-86F	3-30	1-1/2″	13½	2⅞
FL-86G	5-50	1-1/2″	13½	2⅞
FL-86H	6-60	2″	16	3⅞
FL-86J	10-100	2″	16	3⅞

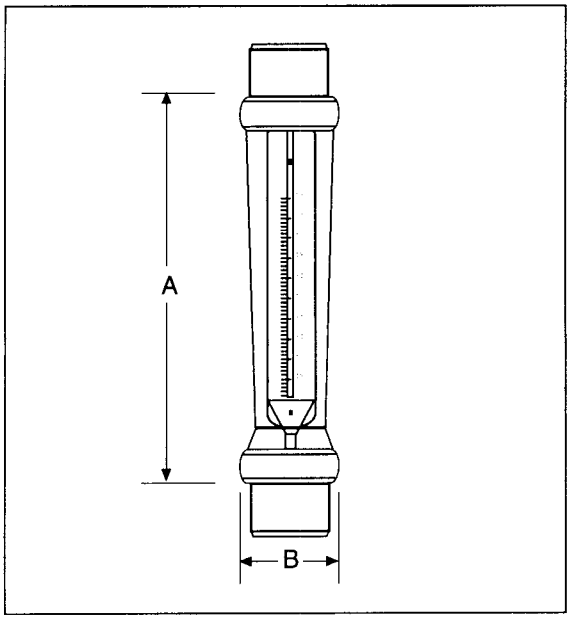

SPECIFICATIONS

Capacity:	0.5 to 100 GPM water (Teflon float)
Metering Tube Material:	Polysulfone or polyamide
Accuracy/Repeatability:	±3% FS/±1/2% ±6% FS/±1% (120 and 150 GPM)
Scale Length:	127 mm (5″)
Float:	Teflon material
Fittings:	PVDF
O-Rings:	Viton FPM (Kalrez optional)

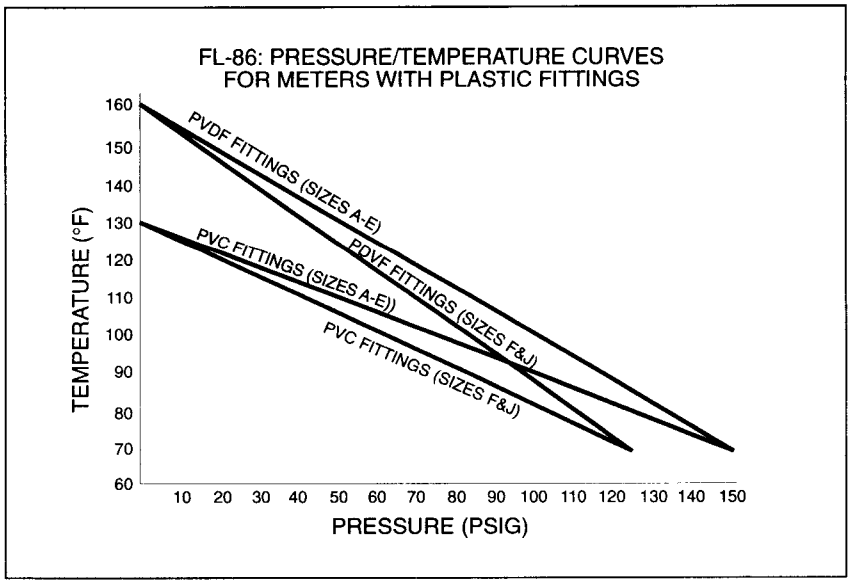

Servicing USA and Canada: Call OMEGA Toll Free

USA
One Omega Drive, Box 4047
Stamford, CT 06907-0047
Telephone: (203) 359-1660
FAX: (203) 359-7700

Canada
976 Bergar
Laval (Quebec) H7L 5A1
Telephone: (514) 856-6928
FAX: (514) 856-6886

Sales Service: 1-800-826-6342 / 1-800-TC-OMEGA℠
Customer Service: 1-800-622-2378 / 1-800-622-BEST℠
Engineering Service: 1-800-872-9436 / 1-800-USA-WHEN℠
TELEX: 996404 EASYLINK: 62968934 CABLE OMEGA

Servicing Europe: United Kingdom Sales and Distribution Center

25 Swannington Road, Broughton Astley, Leicestershire
LE9 6TU, England
Telephone: 44 (1455) 285520 FAX: 44 (1455) 283912

MADE IN USA

WARRANTY

OMEGA warrants this unit to be free of defects in materials and workmanship and to give satisfactory service for a period of **13 months** from date of purchase. OMEGA Warranty adds an additional one (1) month grace period to the normal **one (1) year product warranty** to cover handling and shipping time. This ensures that OMEGA's customers receive maximum coverage on each product. If the unit should malfunction, it must be returned to the factory for evaluation. OMEGA's Customer Service Department will issue an Authorized Return (AR) number immediately upon phone or written request. Upon examination by OMEGA, if the unit is found to be defective it will be repaired or replaced at no charge. However, this WARRANTY is VOID if the unit shows evidence of having been tampered with or shows evidence of being damaged as a result of excessive corrosion; or current, heat, moisture or vibration; improper specification; misapplication; misuse or other operating conditions outside of OMEGA's control. Components which wear or which are damaged by misuse are not warranted. These include contact points, fuses, and triacs.

OMEGA is glad to offer suggestions on the use of its various products. Nevertheless, OMEGA only warrants that the parts manufactured by it will be as specified and free of defects.

OMEGA MAKES NO OTHER WARRANTIES OR REPRESENTATIONS OF ANY KIND WHATSOEVER, EXPRESSED OR IMPLIED, EXCEPT THAT OF TITLE AND ALL IMPLIED WARRANTIES INCLUDING ANY WARRANTY OF MERCHANTABILITY AND FITNESS FOR A PARTICULAR PURPOSE ARE HEREBY DISCLAIMED.

LIMITATION OF LIABILITY: The remedies of purchaser set forth herein are exclusive and the total liability of OMEGA with respect to this order, whether based on contract, warranty, negligence, indemnification, strict liability or otherwise, shall not exceed the purchase price of the component upon which liability is based. In no event shall OMEGA be liable for consequential, incidental or special damages.

Every precaution for accuracy has been taken in the preparation of this manual; however, OMEGA ENGINEERING, INC. neither assumes responsibility for any omissions or errors that may appear nor assumes liability for any damages that result from the use of the products in accordance with the information contained in the manual.

SPECIAL CONDITION: Should this equipment be used in or with any nuclear installation or activity, purchaser will indemnify OMEGA and hold OMEGA harmless from any liability or damage whatsoever arising out of the use of the equipment in such a manner.

RETURN REQUESTS / INQUIRIES

Direct all warranty and repair requests/inquiries to the OMEGA ENGINEERING Customer Service Department. BEFORE RETURNING ANY PRODUCT(S) TO OMEGA, PURCHASER MUST OBTAIN AN AUTHORIZED RETURN (AR) NUMBER FROM OMEGA'S CUSTOMER SERVICE DEPARTMENT (IN ORDER TO AVOID PROCESSING DELAYS). The assigned AR number should then be marked on the outside of the return package and on any correspondence.

FOR **WARRANTY** RETURNS, please have the following information available BEFORE contacting OMEGA:

1. P.O. number under which the product was PURCHASED,
2. Model and serial number of the product under warranty, and
3. Repair instructions and/or specific problems relative to the product.

FOR **NON-WARRANTY** REPAIRS OR **CALIBRATION**, consult OMEGA for current repair/calibration charges. Have the following information available BEFORE contacting OMEGA:

1. P.O. number to cover the COST of the repair/calibration,
2. Model and serial number of product, and
3. Repair instructions and/or specific problems relative to the product.

OMEGA's policy is to make running changes, not model changes, whenever an improvement is possible. This affords our customers the latest in technology and engineering.

OMEGA is a registered trademark of OMEGA ENGINEERING, INC.

© Copyright 1995 OMEGA ENGINEERING, INC. All rights reserved. This documentation may not be copied, photocopied, reproduced, translated, or reduced to any electronic medium or machine-readable form, in whole or in part, without prior written consent of OMEGA ENGINEERING, INC.